COUNTERBALANCED BACKDRAFT DAMPER
STANDARD PERFORMANCE • MEDIUM DUTY
EXTRUDED ALUMINUM BLADES & FRAME
MODEL: BDDCB

Manufactured Air Products™

Model BDDCB is a standard performance counterbalanced backdraft damper designed to automatically prevent the backflow of air while allowing for automatic air intake or exhaust/pressure relief in medium duty HVAC applications. Corrosion-resistant extruded aluminum construction highlights the model's features which include a reinforced mitered corner frame that resists racking, and aerodynamic blades that overlap the jambs for maximum weather protection. Extruded PVC blade seals provide quiet closure as well as extra weather protection. Blade linkage is concealed in jamb for low pressure drop and provides smooth operation at system velocities of up to 1500 fpm. Blade mounted counterweights are easily adjusted to desired opening pressure.

STANDARD CONSTRUCTION:

FRAME: 2" (51) wide x .090" (2.3) nominal wall thickness type 6063-T5 extruded aluminum. Corners are mitered.

BLADES: .050" (1.3) nominal wall thickness type 6063-T5 extruded aluminum on 3 5/8" (92) centers.

LINKAGE: Concealed in jamb.

BEARINGS: Synthetic type.

BLADE SEALS: Extruded PVC.

COUNTER-BALANCE: Adjustable, plated steel weights mounted internally (in the airstream).

FINISH: Mill.

MINIMUM SIZE: 6" x 7" (152 x 178).

MAXIMUM SIZE: Single Section: 40" x 48" (1016 x 1219). Multiple section: Unlimited.

MAXIMUM TEMPERATURE: 200°F (93°C).

MAXIMUM BACK PRESSURE: 3 to 6 in. w.g. (see page 2).

MAX. SYSTEM VELOCITY: 1500 fpm (2500 fpm maximum spot velocity).

MOUNTING:
- ❑ VM Vertical mount (standard)
- ❑ HMU Horizontal mount (airflow up)
- ❑ HMD Horizontal mount (airflow down)

OPTIONS:
- ❑ FF Front flange
- ❑ FFB Front flange with bolt holes
- ❑ FR Rear flange
- ❑ FRB Rear flange with bolt holes
- ❑ Special features: _____ .

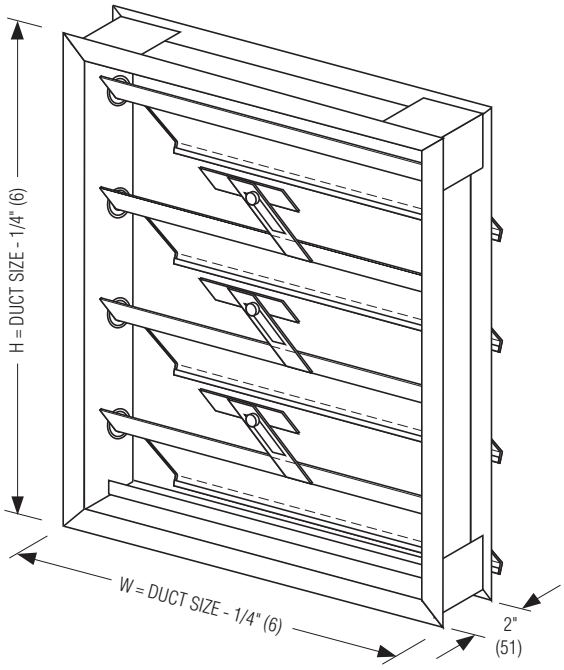

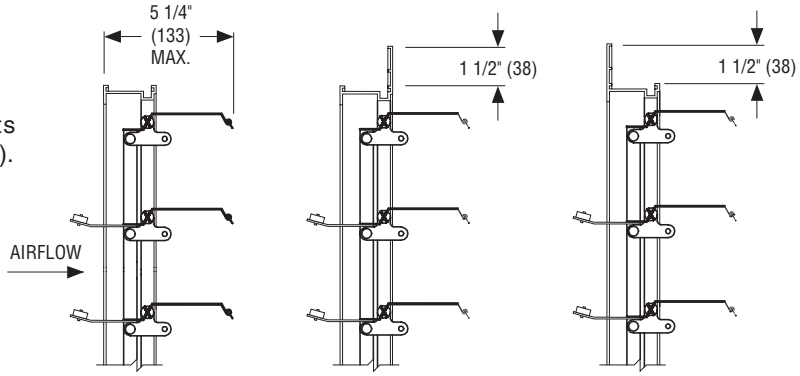

Channel Frame (Duct Mount) (Standard CF) | **Front Flange (on discharge side) (Option FF)** | **Rear Flange (on intake side) (Option FR)**

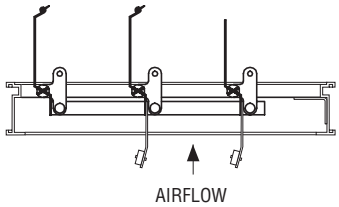

Horizontal Mount – Airflow up (Option HMU) (Available on all frame styles)

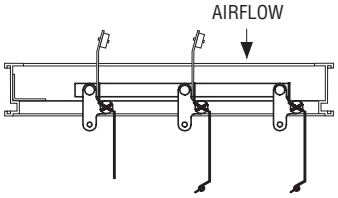

Horizontal Mount – Airflow down (Option HMD) (Available on all frame styles)

SCHEDULE TYPE:	Page 1 of 2 Dimensions are in inches (mm).			
PROJECT:				
ENGINEER:	**DATE**	**B SERIES**	**SUPERSEDES**	**DRAWING NO.**
CONTRACTOR:	**8 - 10 - 09**	**BDD**	**NEW**	**BDD-2**

Manufactured Air Products™ reserves the right to change any information concerning product or pricing without notice.

COUNTERBALANCED BACKDRAFT DAMPER
STANDARD PERFORMANCE • MEDIUM DUTY
EXTRUDED ALUMINUM BLADES & FRAME
PERFORMANCE DATA
MODEL: BDDCB

PERFORMANCE LIMITATIONS AND LEAKAGE DATA:

Damper Width	Maximum Back Pressure	Maximum System Velocity	Operational Data		Leakage*	
			Blades Begin Opening	Blades Fully Open	% of Maximum Flow	CFM per Sq. Ft.
40" (1016)	3.0" w.g.	1500 fpm	.01" w.g. (2.5 Pa)	.05" w.g. (12.4 Pa)	1.00	15
36" (914)	4.0" w.g.	1500 fpm			1.00	15
24" (610)	5.0" w.g.	1500 fpm			1.20	18
12" (305)	6.0" w.g.	1500 fpm			2.67	40

Pressure and velocity limitations shown are guidelines for design purposes. Although ratings are on the conservative side, contact Manufactured Air Products for requirements beyond limitations shown.
*Leakage data is based upon a pressure differential of 1 in. w.g., tested in accordance with AMCA Standard 500-D.

PRESSURE DROP: SIZE: 36" x 36" (914 x 914)

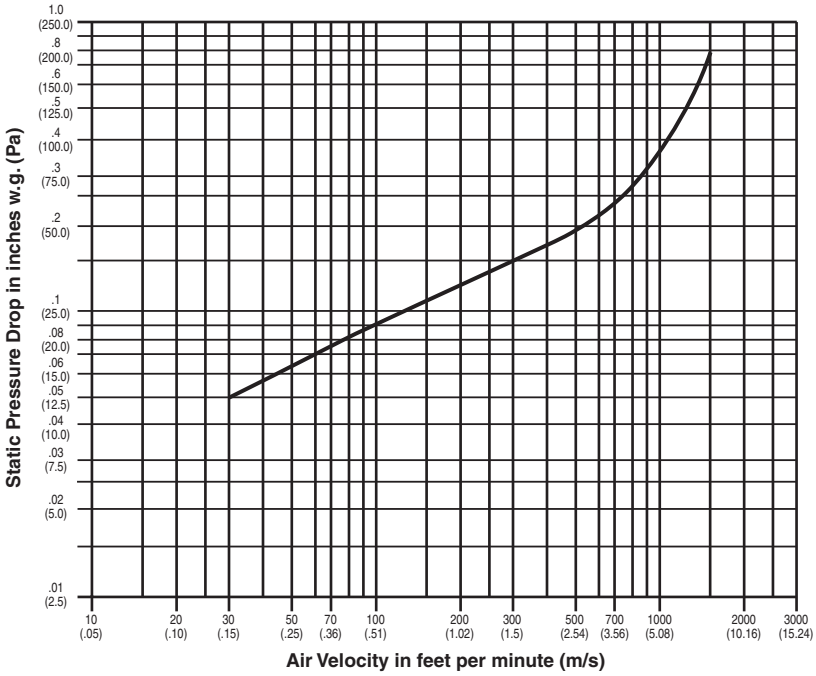

Tested per AMCA Standard 500-D using test set-up figure 5.5, plenum mounted.

SCHEDULE TYPE:	Page 2 of 2 Dimensions are in inches (mm).			
PROJECT:				
ENGINEER:	**DATE**	**B SERIES**	**SUPERSEDES**	**DRAWING NO.**
CONTRACTOR:	**8 - 10 - 09**	**BDD**	**NEW**	**BDD-2**

Manufactured Air Products™ reserves the right to change any information concerning product or pricing without notice.