SMACNA STANDARD DUCT ACCESS DOORS
SQUARE AND RECTANGULAR • INSULATED
MODELS: ADR AND ADH

MODEL DESCRIPTION:
These economical quality access doors meet SMACNA requirements and provide quick, simple installation wherever duct access is required. Available in 20 sizes to meet all access requirements.
Camlock operation for positive seal and easy opening.

CONSTRUCTION DETAILS:
1. Die-formed 22 ga. (0.86) galvanized steel flanged frame for strength.
2. Die-formed double skin 22 ga. (0.86) galvanized door panel for extra strength.
3. 1" (25) insulation.
4. Notched knock-over tabs.
5. Plated steel camlock fasteners.
6. Positive seal polyethylene gasket.
7. Safety retaining chain standard on removable door Model ADR.
8. Continuous piano-type hinge standard on Model ADH.
9. Removable door Model ADR is furnished with four camlocks on sizes over 14" (356) in width or height. Hinged door Model ADH is furnished with two camlocks on sizes over 14" (356) in height.
10. Meet SMACNA construction specifications for systems up to 2" w.g. (500 Pa).

OPTIONS:
- ❑ F10 for 1" (25) fiberglass duct.
- ❑ F15 for 1 1/2" (32) fiberglass duct.
- ❑ HP High Pressure. Adds second gasket on underside of frame for frame to duct seal.

Manufactured by members of S.M.W.I.A.

NOMINAL SIZE		QUANTITY PER CARTON
6 x 6 (152 x 152)	✻	10
8 x 8 (203 x 203)	✻	10
10 x 8 (254 x 203)		10
10 x 10 (254 x 254)	✻	10
12 x 10 (305 x 254)		10
12 x 12 (305 x 305)	✻	10
14 x 10 (356 x 254)		10
14 x 12 (356 x 305)		10
14 x 14 (356 x 356)	✻	10
16 x 12 (406 x 305)		5
16 x 14 (406 x 356)		5
16 x 16 (406 x 406)	✻	5
18 x 12 (457 x 305)		5
18 x 14 (457 x 356)		5
18 x 16 (457 x 406)		5
18 x 18 (457 x 457)		5
20 x 16 (508 x 406)		5
20 x 20 (508 x 508)		5
24 x 18 (610 x 457)		5
24 x 24 (610 x 610)		5

✻ STOCK SIZES

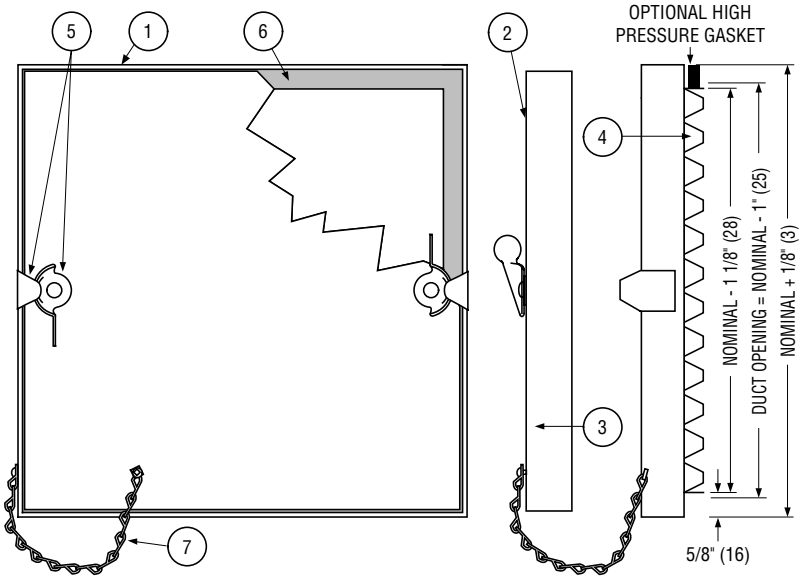

❑ **MODEL ADR REMOVABLE DOOR (PAIRED CAMLOCKS)**

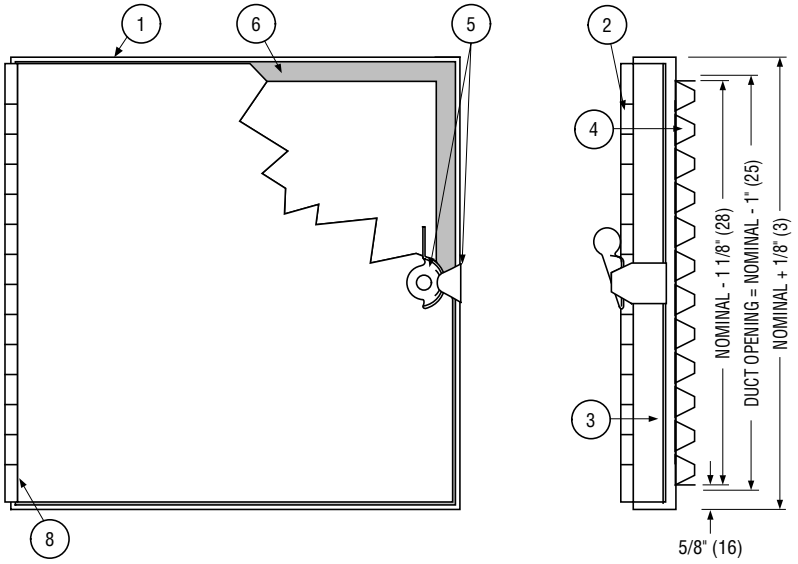

❑ **MODEL ADH HINGED DOOR (WITH CAMLOCK CLOSURE)**

❑ **FIBERGLASS DUCT OPTION**

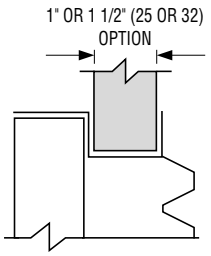

Dimensions are in inches (mm).

SCHEDULE TYPE:				
PROJECT:				
ENGINEER:	**DATE**	**B SERIES**	**SUPERSEDES**	**DRAWING NO.**
CONTRACTOR:	**4 - 23 - 03**	**AD**	**NEW**	**AD-1**

Manufactured Air Products™ reserves the right to change any information concerning product or pricing without notice.